Protrol

Fast Fault Detection –Profitable Regardless of How You Calculate

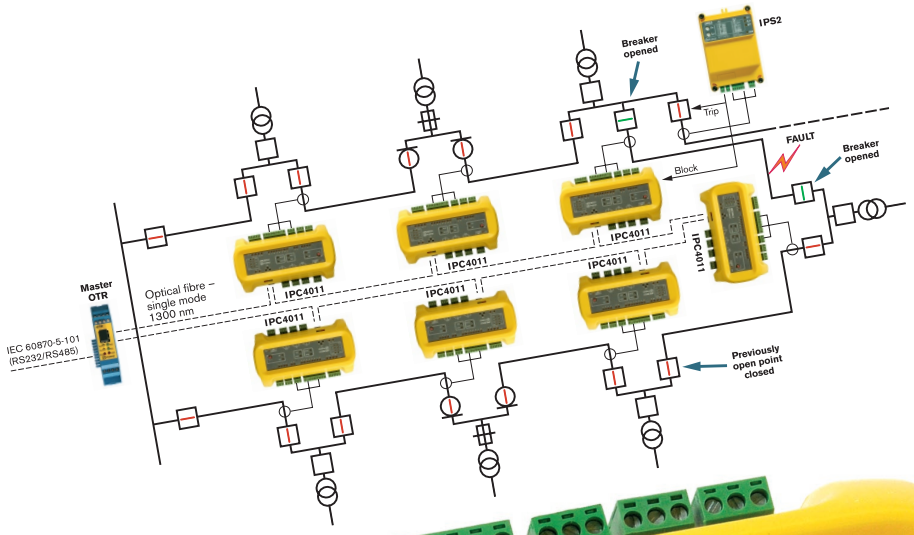

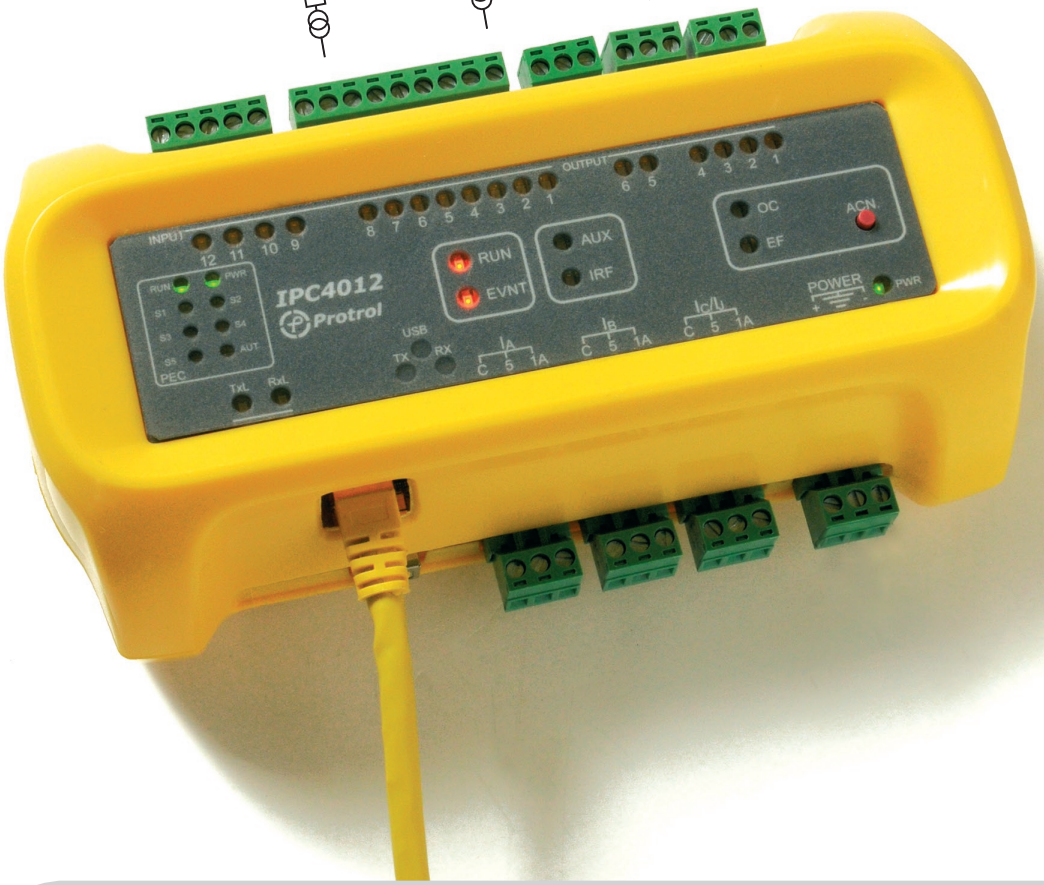

Solutions that Increase the Availability in Your Distribution Grid

– APPLICATION GUIDE –

Fast and Precise Detection of All Faults

Protrol's products build on patented technology that requires no measurement of polarising voltage. This is a very cost effective solution for secondary substations. Earth faults that are otherwise difficult to detect are localised fast, both their direction and amplitude. The sensitivity is comparable to the best directional earth fault relays.

Our product program is tailor-made for reliable performance monitoring and fault detection in everything from small rural substations to urban distribution centres.

From Local Flashing LED to "Self-healing Grid"

In this brochure we provide some examples on how this technology can be applied for distribution grids with various conditions and user requirements. We offer many types of solutions - from local fault indication to very advanced applications that not only detect and report to the dispatch centre but also include fast automatic fault disconnection and power restoration of the network. We simply move the selectivity closer to the fault, so that considerably fewer customers - or in some cases none at all - experience a power outage.

This is How it Works

In event of earth faults downstream the measuring point a small but fully measurable asymmetry will be registered between the phases. During upstream earth faults the measuring point no asymmetry will be registered. This means that the fault direction can be determined. This technology works very distinctly also for arcing earth faults.

Choose a Remote Interface that Suits Your Needs

You can choose between copper wire (RS485), optical fiber and Ethernet, depending on what is best suitable in your network infrastructure and remote control system.

Investment With Return – For Both Society and Distributor

Our society's dependence on reliable power supply is steadily increasing, and thereby also the demands on power distribution companies. Power outages are expensive – both directly and indirectly. The governing authorities underline their demands on distributors by measuring SAIFI or SAIDI. These demands will hardly decrease. Investment in fast fault detection and disconnection will therefore give return, regardless of how you calculate.

The conditions for electric power distributors are different and depend on the topology of the network and the sector of society served. Generally speaking, the cost of power outage per minute is highest for the commercial sector (stores, offices, entertainment), followed by industry, agriculture, households etc. Sectors that are especially sensitive to power outage, for example hospitals and certain industries, often have their own backup generators. However, these are not always working properly and the damages can be considerable.

Benefits from Distribution Automation – Calculation Examples

When calculating the benefit of reliable and accurate fault detection, it is necessary to estimate the direct costs in connection with power outage, repair and societal costs. Stable revenues, reduced labour costs and less degradation of equipment (due to repetitive reclosure tests) are part of the categories above. There is also the additional value of "satisfied customers" to consider.

Below are a few examples which intend to illustrate the real benefits with realistic assumptions. The calculations build on data from Swedish Energy authority and are based on real, existing Swedish networks. If you would like to enter your own data we can provide the software tools needed.

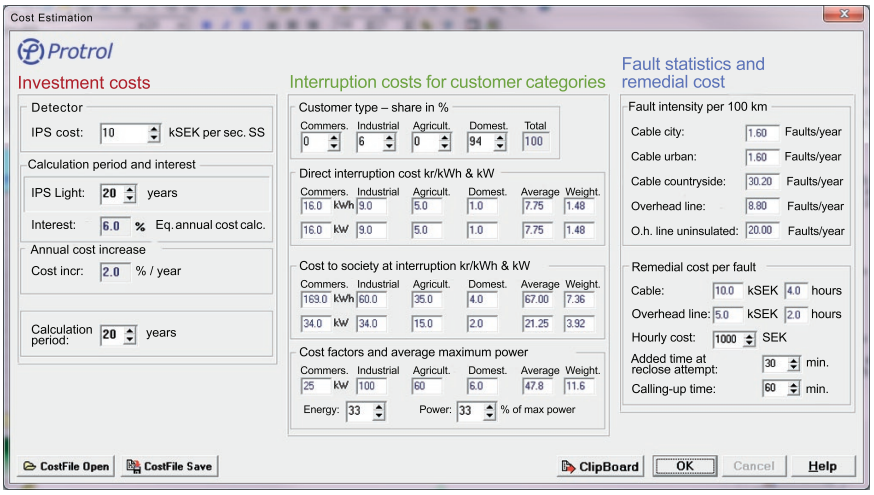

Customers' outage hours (CMI / 60) during 20 years in an existing Swedish distribution network

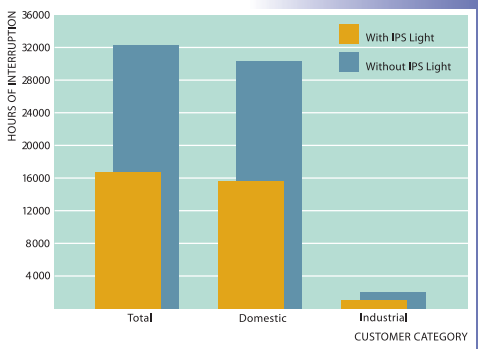

Costs during 20 years for an existing Swedish distribution network (Savings 1 393 kSEK)

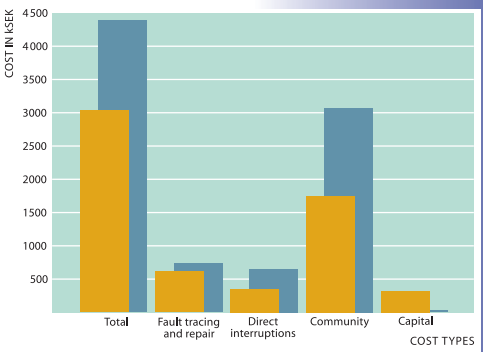

EXAMPLE 1 (only local fault indication) Radial rural network: 40.3 km cable and 12.5 km OH lines. Total of 160 customers of which 151 are households and 9 smaller industries. Fault detectors are placed in all the outgoing feeders of every station – 22 in total with visual fault indication (IPS Light). Theoretically, the number of reclosure tests necessary to locate the fault without fault detectors is 5. When using fault detectors, no reclose attempts are necessary to find the fault. The total savings during the 20 year period is 1.4 MSEK and the hours of power outage for customers are reduced from 32000 to 17000. Note especially that with a self-healing concept, the power outage hours will theoretically be zero and the outage cost will correspond to the investment in the automation only.

EXAMPLE 2 (more advanced solution - automatic fault disconnection) Radial rural network: 60 km cable. Customer categories: 5 % Industry, 5 % Agriculture, 5 % Commercial, 85 % Households. Consumption: Industry = 6 x Households, Agriculture = 3 x Households, Commercial = 2 x Households. Fault detectors are located in all outgoing feeders in all stations – a total of 20 with control signal that both disconnects the faulty feeder and send information to dispatch center (IPS Relay). IPS Relay disconnects the faulty radial in the substations during the reclosure sequence. A fault in the system without using the fault detectors will theoretically cause an outage of 2.5 hours, which will correspond to a total cost of 230 kSEK. The investment cost for the fault detectors is 200 kSEK. Already after the first fault the investment will be paid for.

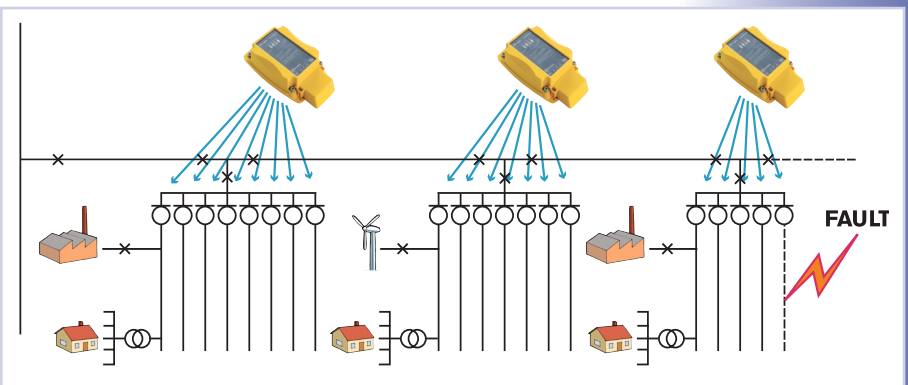

On the following pages we demonstrate how Protrol's technology can be used in several types of networks with different remote control solutions. The applications vary from local fault indication at rural secondary substations to more advanced solutions such as automatic fault disconnection and power restoration (self-healing).

The IPC detector is optimal for use in a secondary substation with respect to measuring, fault indication and remote operation of switching devices.

IPC4011: Fault Detection and Power Restoration in Open Loop and Self-healing Network

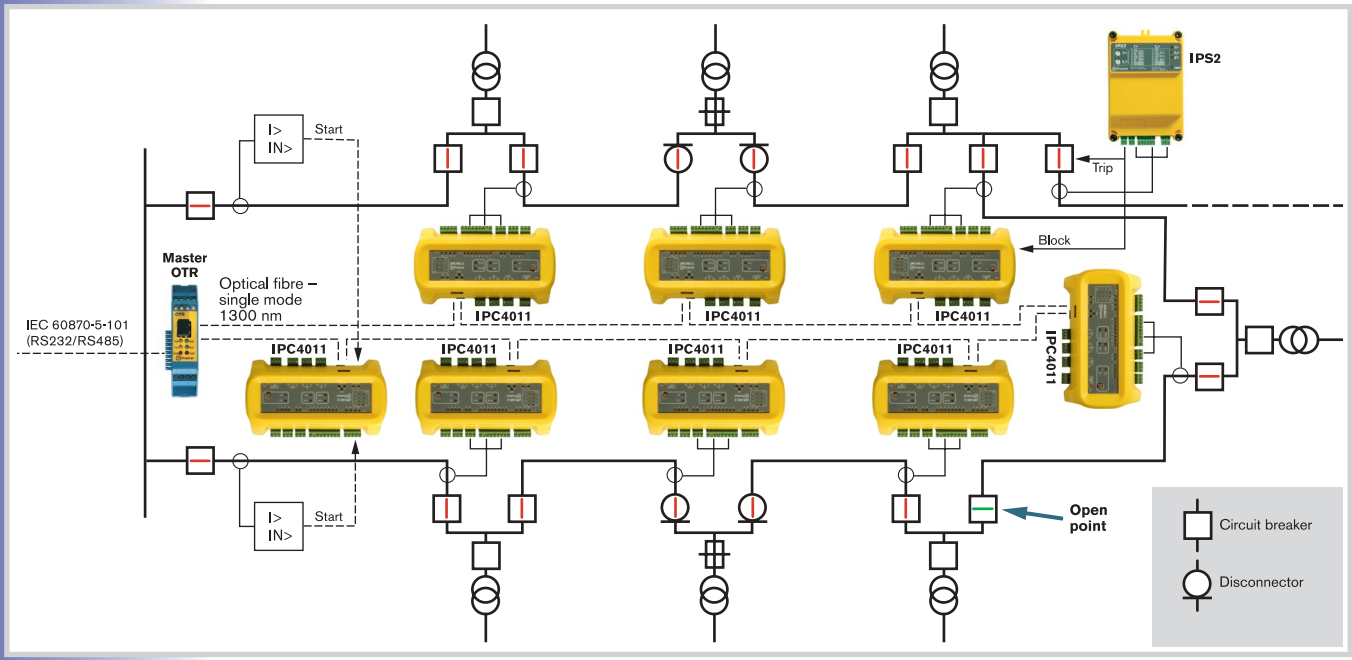

Large picture above: before fault.
Small picture to the right (section): after fault.

Remote control via optical fiber (single mode, 1300 nm, remote protocol IEC60870-5-101).

Automatic fast power restoration possible with circuit breakers (see small picture).

When a fault occurs in the loop, the respective IPC unit will send information if the fault has passed (earth fault or overcurrent), both to the dispatch centre via remote protocol and to the nearest IPC unit. This enables automatic power restoration within 200 ms (at the blink of an eye), i.e., so fast that the protection relay in the feeding substation will not operate. The customers will experience only a very short voltage dip (< 0.2 s).

At faults downstream the radial feeder (top right), IPS2 will trip the outgoing feeder and block the automatic power restoration of the loop.

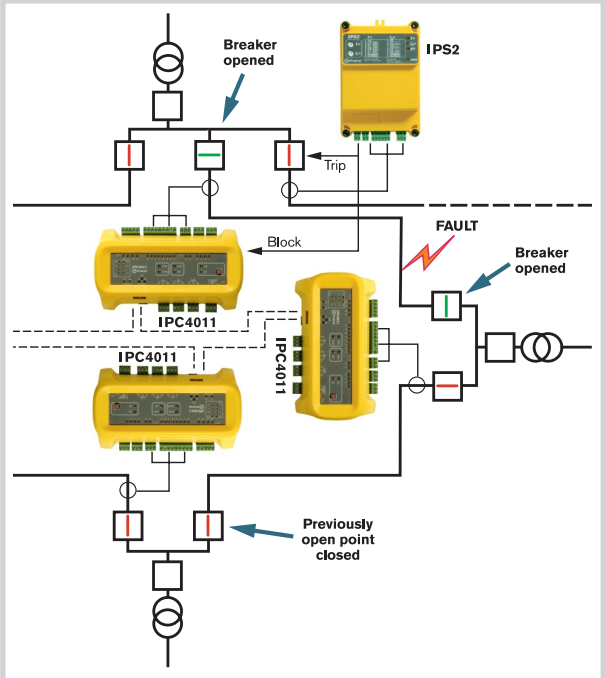

IPC4010: Remote Control via Signal Cable (RS485 Multidrop)

Function similar to IPC4011 (se previous example). In this example, circuit breakers are not used and power restoration operations are performed when the loop is disconnected from the distribution substation.

– IPC4010 has a built-in RS485 short range modem, intended for remote control via control cables. Up to 32 units can be connected to the same multi-drop loop. You can accordingly hook up many IPC4010 to one and the same wire pair (4-wire configuration is also available).
– RS485 has balanced differential signalling. It enables remote control over long distances in multi-transceiver networks (tens of kilometres at low speed).
– For RS485 it is important to follow given rules for the topology of the network, in order to avoid problems with mirroring, for example.
– Star networks are not recommended.
– Twisted pair signal cable with 120 Ohm characteristic impedance is recommended.

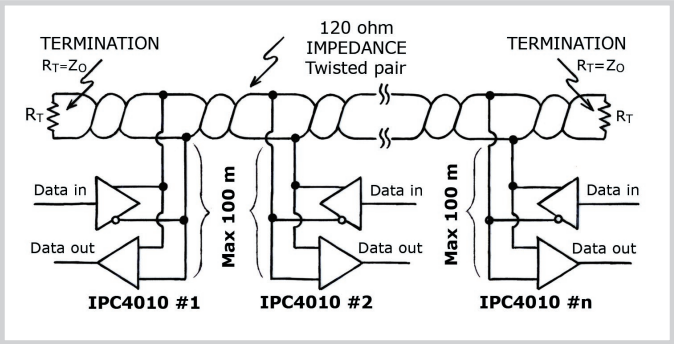

– Always use end termination (120 Ohm), typically in the last IPC4010 and in the modem. OBS! Two end terminations are the maximum!
– For remote control via long cable (several kilometers) with 1200 baud and IPC4010-connected multi-drop, "the stub" to each unit should not be longer than 100 m.
– IPC4010 has "pullup" and "pulldown" resistances that can be connected with short-circuit plugs. These guarantee that the remote control line has a defined state. As a rule of thumb, these resistors should be connected in at least one + 10 % of the IPC4010 units of the same network.

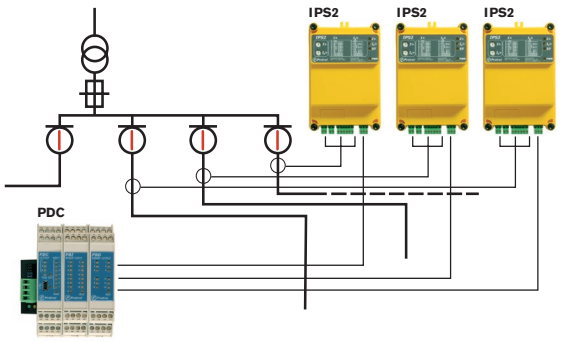

In this example with three outgoing cables, three IPS2 and one Protrol RTU are used to cover all feeders.

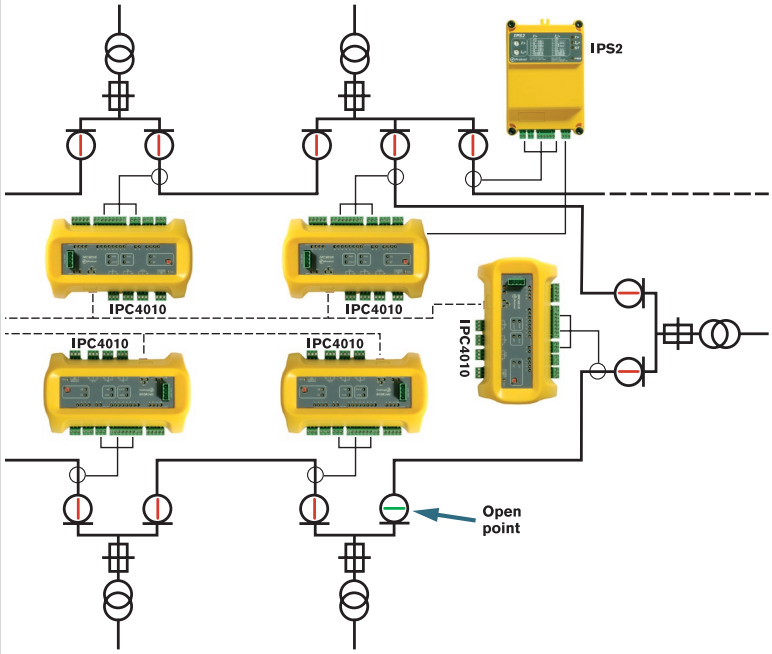

IPC4012: Remote Control via Ethernet

Function similar to IPC4011 and IPC4010 above, but with remote control via Ethernet (remote protocol IEC60870-5-104).

Automatic fast power restoration is possible in stations with circuit breakers. With load disconnectors, restoration will have to be done when the loop is disconnected from the distribution substation.

In the station with two outgoing cables (top right), two IPS2 are shown together with a Protrol RTU for Ethernet as an alternative solution.

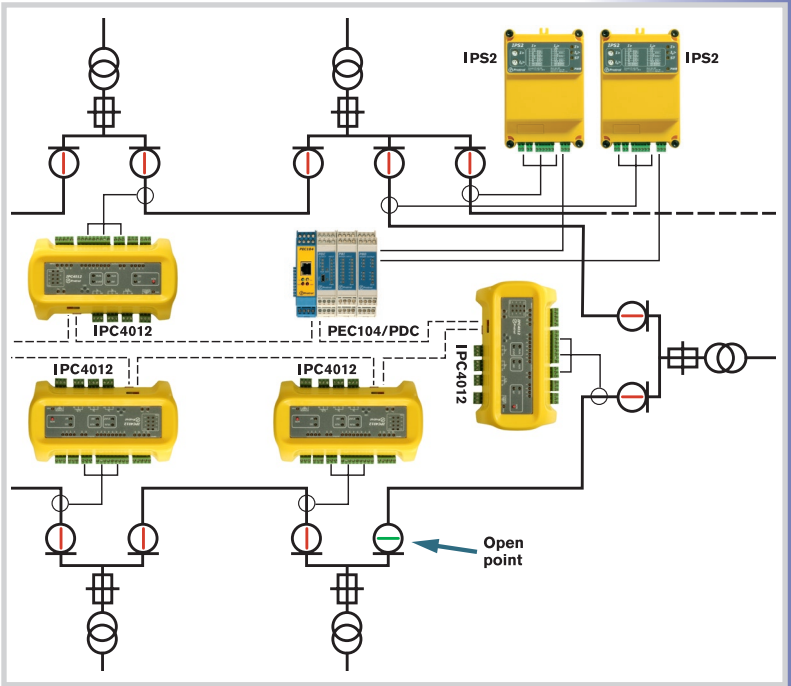

IPS2: Fault Detection and Power Restoration in Radial Networks

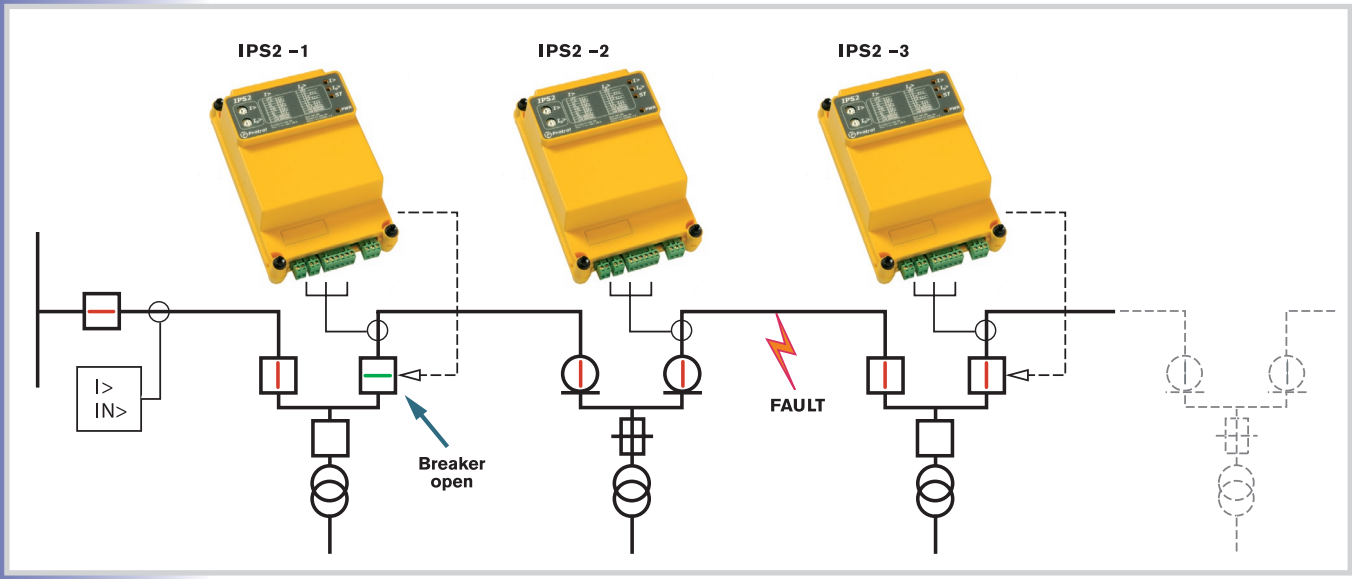

This is a simpler solution for radial networks. The secondary substations are supplied with fault detectors of type IPS2, where the fault indication can be shown visually (flashing LED) or with closing contact (or both).

In strategically selected stations with circuit breakers, IPS2 can disconnect downstream faults.

The diagram to the right illustrates when the different IPS2 units operate (in this case with time selectivity).

Note that with a pre-charged spring you need no auxiliary power at the secondary substation. IPS2 has a backup via super capacitors, and the trip relay uses 230 V from the low voltage side of the transformer.

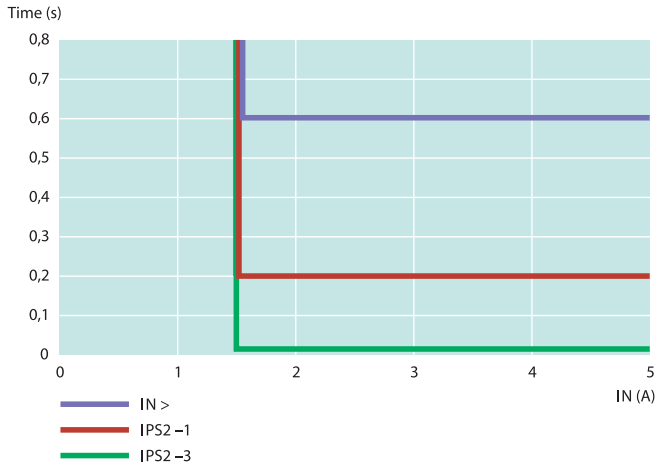

IPS Light: Fault Indication in Radial Networks

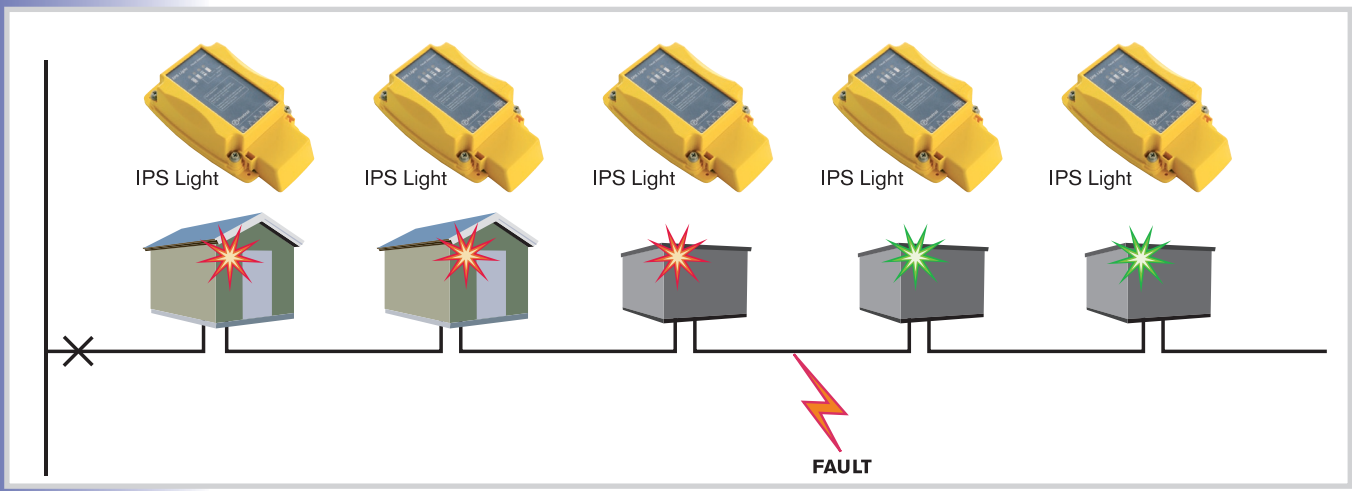

This is the simplest solution with only local fault indication. The secondary substations are supplied with fault detectors of the type IPS Light with visual indication (flashing LED; red or green).

The LEDs on the stations upstream the fault are flashing red, while those downstream the fault are flashing green. The repair personnel can thereby easily and fast localize the fault on the cable. They don't even have to exit their car.

Fault Detection and Disconnection of Overhead Line Section in Radial Networks

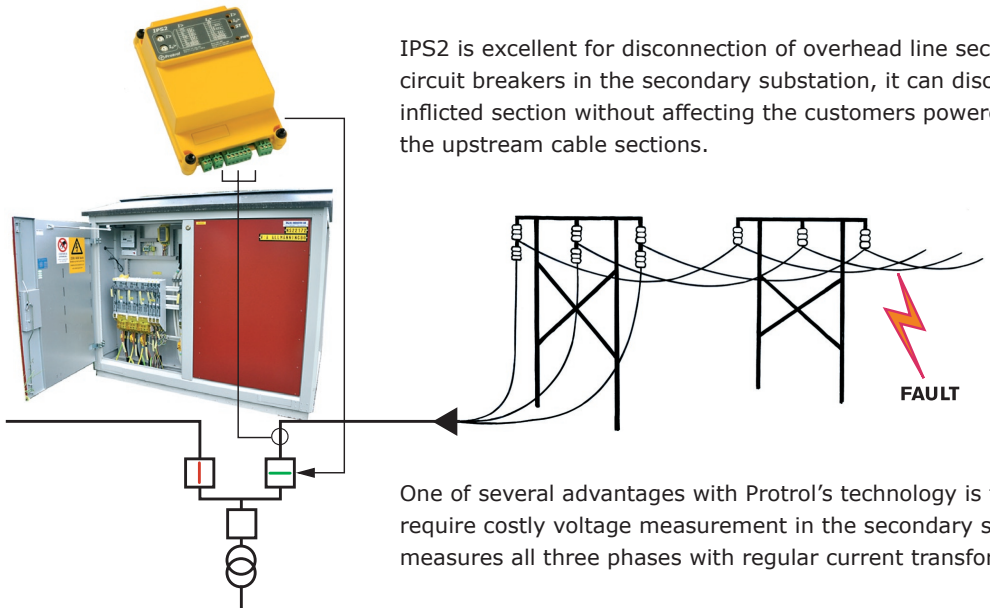

IPS2 is excellent for disconnection of overhead line sections. With circuit breakers in the secondary substation, it can disconnect the fault-inflicted section without affecting the customers powered by the upstream cable sections.

One of several advantages with Protrol's technology is that it does not require costly voltage measurement in the secondary substations; it measures all three phases with regular current transformers.

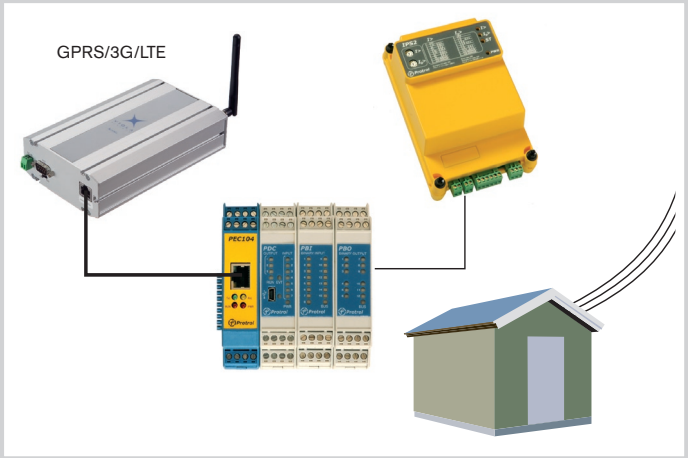

Wireless Solution

If no optical fiber, copper wire or Ethernet is available, wireless remote control may be the solution. The example on the picture shows Ethernet via GPRS /3G / LTE.

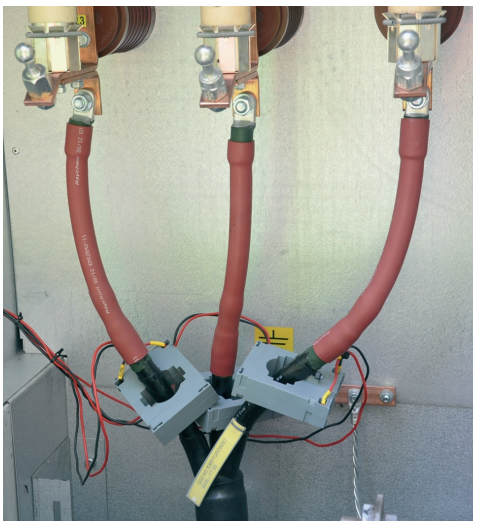

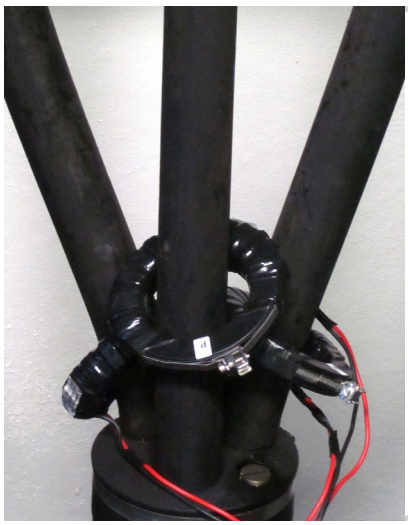

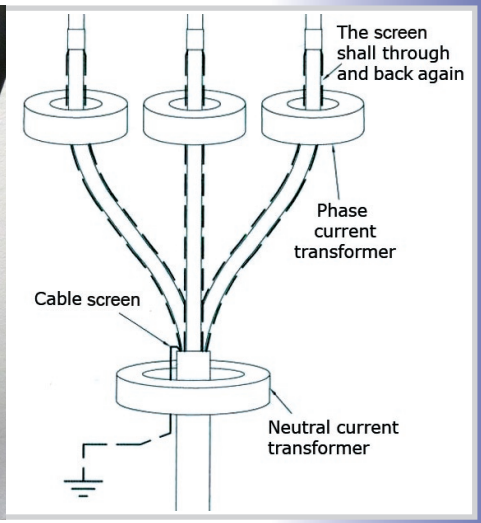

Measurement with Current Transformers

Protrol's patented detection technology is based on measurement and comparison of the phase currents (or two phases + I_0) using regular current transformers, see pictures above. The current transformers must be mounted on fully isolated part. Left: Solid current transformers on PEX-cable. Middle: Split-core current transformers on oil-insulated cable. Note the handling of the screen on the picture to the right. The screen is pulled through the transformer and pulled back to avoid current measurement in the screen.

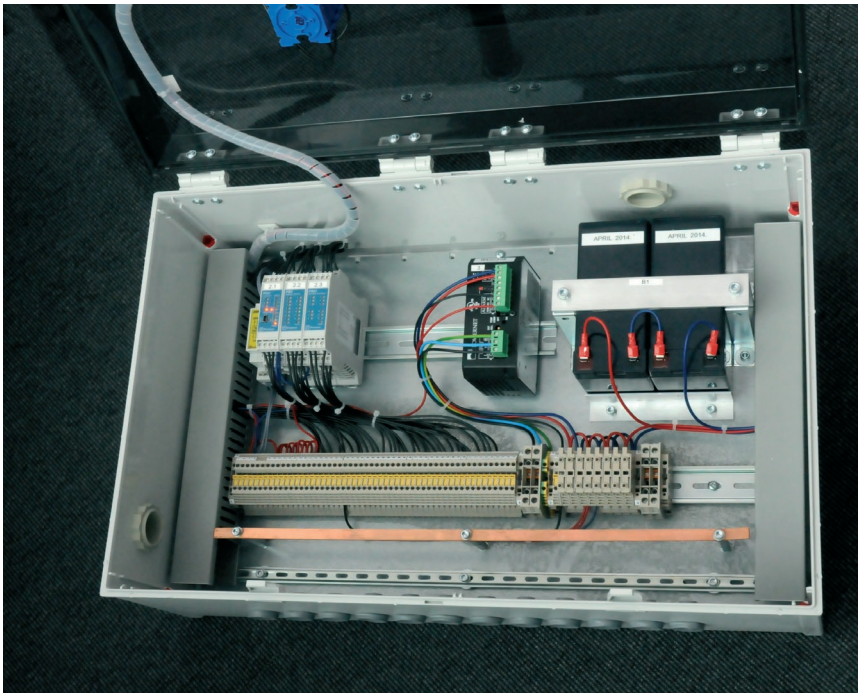

Customer Adapted Solutions

We build fully equipped cabinets with detectors/RTU/batteries/capacitor devices and chargers. Customized solutions adjusted to each customer's needs and wishes. Ask us, and we will tell you more.

The Company Behind the Technology

Protrol is a development and consulting company within power and automation technologies, founded in 2002.

Protrol's products are developed for cost-effective performance monitoring and fault detection in everything from small rural substations to urban distribution centres. The products build on patent protected technology.

Protrol offers expertise within several fields, focusing on HVDC, wind power and electric power distribution.

Protrol's customers are mainly in the power companies, utilities and industries.

Welcome!

Protrol

Protrol AB, Ullevigatan 19, SE 411 40 Göteborg
Phone: +46 31 45 82 00. E-mail: info@protrol.se
www.protrol.se